ISSUE DATE 15/12/2023

Elstead - Cromwell CW18-OLD-BRZ Chandelier

REFERENCE

- SKU: FCL-38356
- Supplier SKU: CW18-OLD-BRZ
- Barcode: 5024005516309

DESCRIPTION

A truly medieval style range hand-made in heavy iron. Each piece is individually hand painted in a unique Old Bronze finish and the collection has been designed and manufactured exclusively by Elstead.

CATEGORY

- Brand: Elstead Lighting
- Family: Cromwell
- Category: Indoor Lighting / Ceiling / Chandelier

APPEARANCE

- Base: Old Bronze
- Detail: Clear Crystal Glass

DIMENSION

- Height: 1285 - 6000mm
- Diameter: 1300mm
- Weight: 23.4kg

LIGHT SOURCE

- Lamp included: No
- Lamp detail: 18 x 60W Max E14 SES (required)
- Dimmable
- Energy class: Not applicable
- Switch: No

SPECIFICATION

- Ingress protection: IP20
- Class: Class I - Single Insulated, Earthed
- Voltage: 240V

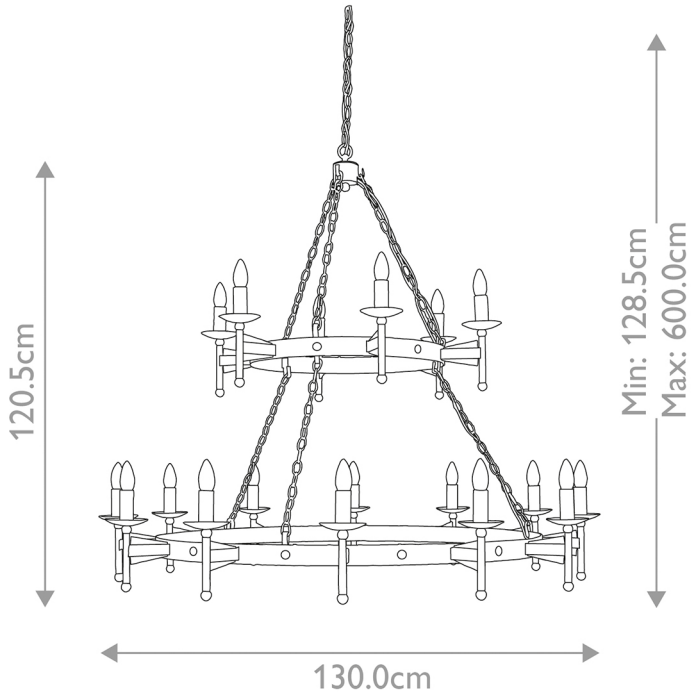

CONTACT

www.firstchoicelighting.co.uk
info@firstchoicelighting.co.uk