**ISSUE DATE** 15/12/2023

## Elstead - Old Park OLD-PARK-PB Semi-Flush

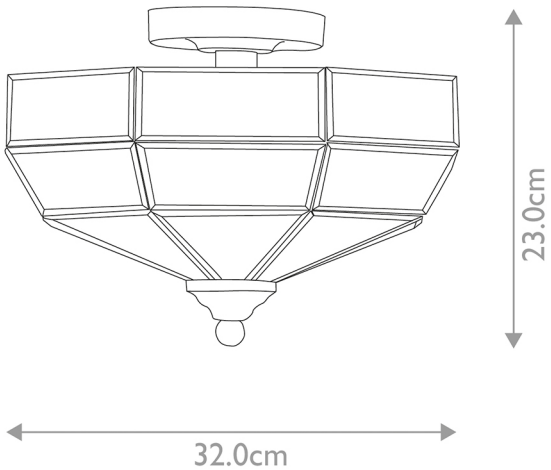


### REFERENCE

- SKU: FCL-38385
- Supplier SKU: OLD-PARK-PB
- Barcode: 5024005484004

### DESCRIPTION

A range of semi-flush ceiling fittings, ideal for low ceilings and hallways. Made mostly from solid brass, Old Park is available in Polished Brass, Polished Nickel or Antique Brass finishes.

### CATEGORY

- Brand: Elstead Lighting
- Family: Old Park
- Category: Indoor Lighting / Ceiling / Flush

### APPEARANCE

- Base: Polished Brass Plate
- Shade: Clear Glass

### DIMENSION

- Height: 230mm
- Diameter: 320mm
- Weight: 2.64kg

### LIGHT SOURCE

- Lamp included: No
- Lamp detail: 2 x 60W Max E27 ES (required)
- Dimmable
- Energy class: Not applicable
- Switch: No

### SPECIFICATION

- Ingress protection: IP20
- Class: Class I - Single Insulated, Earthed
- Voltage: 240V