FEISS
EST. 1955

ISSUE DATE 21/12/2023

LightingOnline GROUP

Elstead - Feiss - Remi FE-REMY-F Flush Light

REFERENCE

- SKU: FCL-46639
- Supplier SKU: FE-REMY-F
- Barcode: 5024005609001

DESCRIPTION

The Remy collection is a striking family with clear influence from the French Arts and Crafts scene, in particular featuring a decorative metal circle finished in Parisienne Gold. These heavy hand made iron fittings include a Bronze Organza shade to soften the lighting with the main fitting body painted in a Heritage Bronze finish.

CATEGORY

- Brand: Feiss Lighting
- Family: Remy
- Category: Indoor Lighting / Ceiling / Flush

APPEARANCE

- Base: Heritage Bronze
- Shade: Bronze Organza
- Detail: Parisienne Gold Paint

DIMENSION

- Height: 238mm
- Width: 368mm
- Depth: 368mm
- Weight: 6.48kg

LIGHT SOURCE

- Lamp included: No
- Lamp detail: 2 x 60W Max E27 ES (required)
- Dimmable
- Energy class: Not applicable
- Switch: No

SPECIFICATION

- Ingress protection: IP20
- Class: Class I - Single Insulated, Earthed
- Voltage: 240V

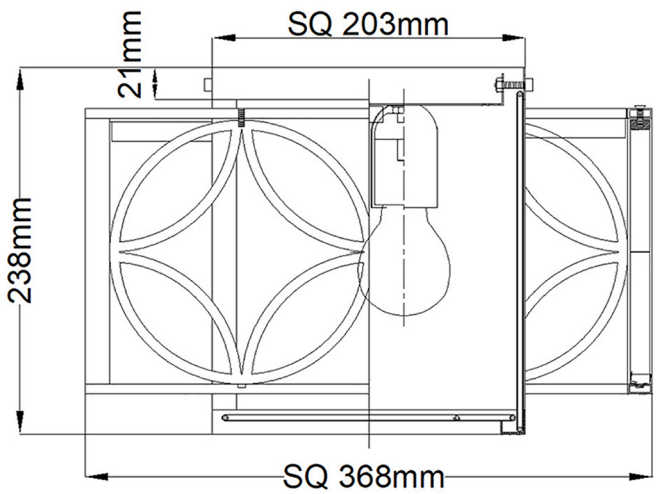

CONTACT

www.firstchoicelighting.co.uk
info@firstchoicelighting.co.uk