KICHLER

LightingOnline GROUP

Elstead - Kichler - Saldana KL-SALDANA3 Chandelier

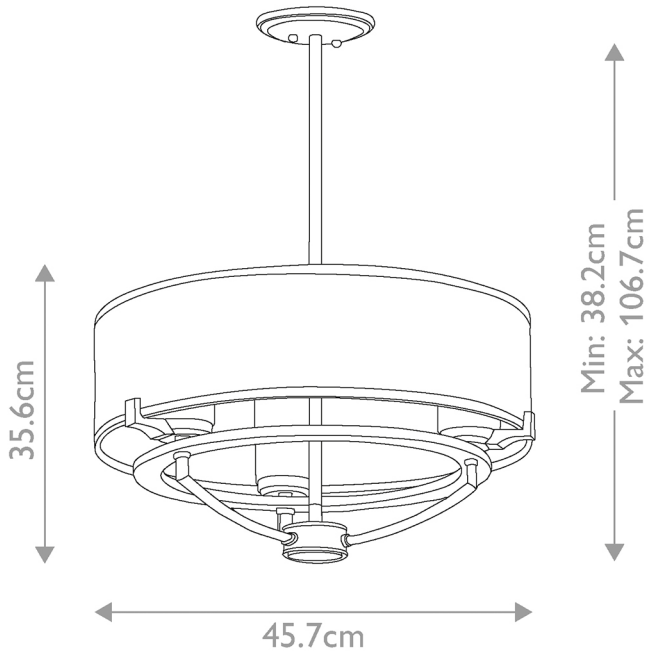

REFERENCE

- SKU: FCL-52817
- Supplier SKU: KL-SALDANA3
- Barcode: 5024005238317

DESCRIPTION

Soft shades give the Saldana LED collection a glowing celestial feel. When lit, the outer organza shade shimmers, diffusing the light from the satin-etched opal glass inside. The structure of the Classic Pewter finished arms provides the perfect foundation for this light and airy feeling.

CATEGORY

- Brand: Kichler Lighting
- Family: Saldana
- Category: Indoor Lighting / Ceiling / Single

APPEARANCE

- Base: Classic Pewter
- Shade: Opal Glass
- Detail: Sheer Organza

DIMENSION

- Height: 382 - 1067mm
- Diameter: 457mm
- Weight: 3.03kg

LIGHT SOURCE

- Lamp included: Yes
- Lamp detail: 3 x 3W LED G9 (included)
- Dimmable
- Kelvin: 3000K (Warm White)
- Lumens: 960Lm
- Lamp hours: 25,000Hrs
- Energy class: F
- Switch: No

SPECIFICATION

- Ingress protection: IP20
- Class: Class I - Single Insulated, Earthed
- Voltage: 240V

CONTACT