firstchoicelighting®

Elstead - Ascent ASCENT-TL-PN Table Lamp

REFERENCE

- SKU: FCL-57799
- Supplier SKU: ASCENT-TL-PN
- Barcode: 5024005364719

DESCRIPTION

Steel tapered column table lamp finished in Polished Nickel. Includes a Dark Grey faux silk hard-backed shade.

CATEGORY

- Brand: Elstead
- Family: Ascent
- Category: Indoor Lighting / Table / Shade Included

APPEARANCE

- Base: Polished Nickel Plate
- Shade: Grey Faux Silk

DIMENSION

- Height: 790mm
- Diameter: 300mm
- Base height: 450mm
- Base width: 90mm
- Shade Height: 300mm
- Weight: 2.92kg

LIGHT SOURCE

- Lamp included: No
- Lamp detail: 60W Max E27 ES (required)
- Non-dimmable
- Energy rating: A++, A+, A, B, C, D, E
- Switch: In-line On/Off Switch

SPECIFICATION

- Ingress protection: IP20
- Class: Class I - Single Insulated, Earthed
- Voltage: 240V

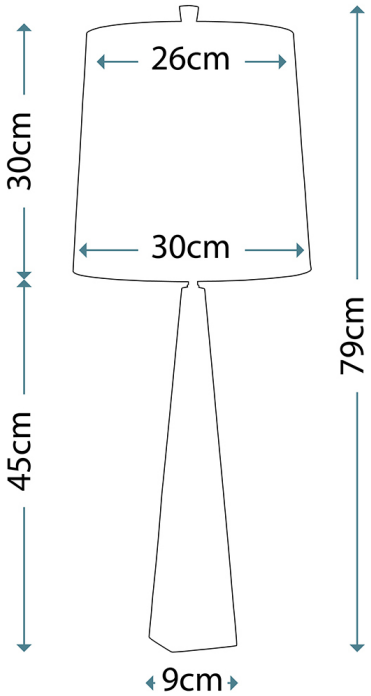

CONTACT