FEISS
EST. 1955

ISSUE DATE 15/12/2023

LightingOnline GROUP

Elstead - Feiss Limited Editions - Brianna FE-BRIANNA2-PN Wall Light

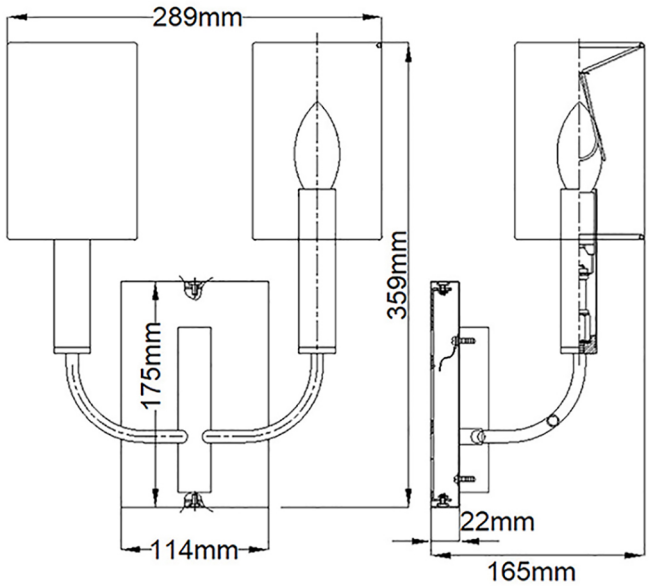

REFERENCE

- SKU: FCL-58038
- Supplier SKU: FE-BRIANNA2-PN
- Barcode: 5024005391111

DESCRIPTION

Brianna's graceful, seamless curvature and elongated tubular arms lend fluidity and modern appeal to this classic minimalist silhouette. Available in rich, gilded Burnished Brass and the more contemporary Polished Nickel finish. Brianna wall lights include cylindrical shades in fresh White Linen.

CATEGORY

- Brand: Feiss Limited Editions
- Family: Brianna
- Category: Indoor Lighting / Wall / Decorative

APPEARANCE

- Base: Polished Nickel Plate
- Shade: White Linen

DIMENSION

- Height: 359mm
- Width: 289mm
- Depth: 165mm
- Weight: 1.85kg

LIGHT SOURCE

- Lamp included: No
- Lamp detail: 2 x 60W Max E14 SES (required)
- Dimmable
- Energy class: Not applicable
- Switch: No

SPECIFICATION

- Ingress protection: IP20
- Class: Class I - Single Insulated, Earthed
- Voltage: 240V

CONTACT