astro

firstchoicelighting®
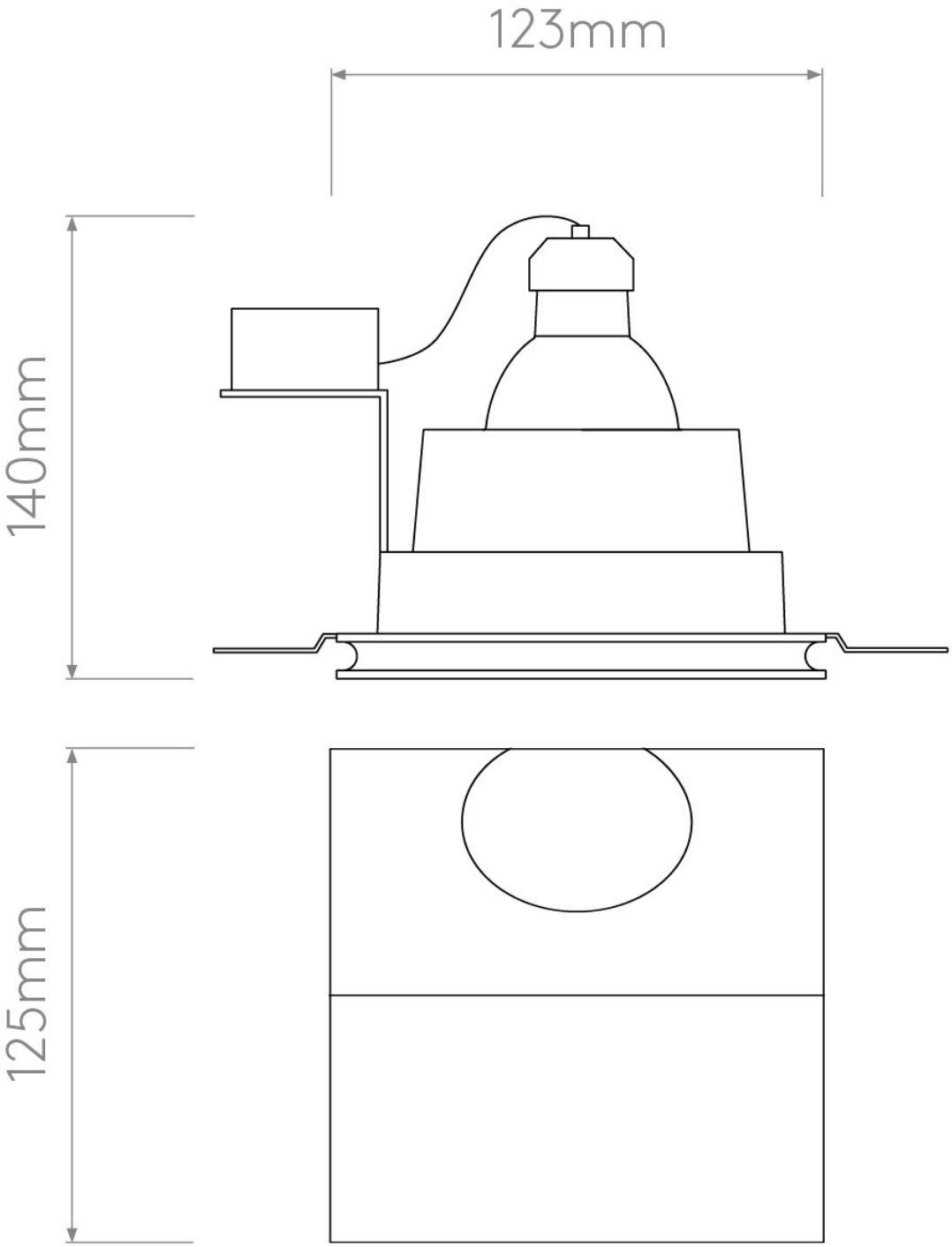
Astro Lighting - Blanco 45 1253003 (5656) - Plaster Downlight/Recessed Spot Light