astro

LightingOnline GROUP

Astro Lighting - Minima Square Adjustable 1249006 - Matt White Downlight/Recessed Spot Light

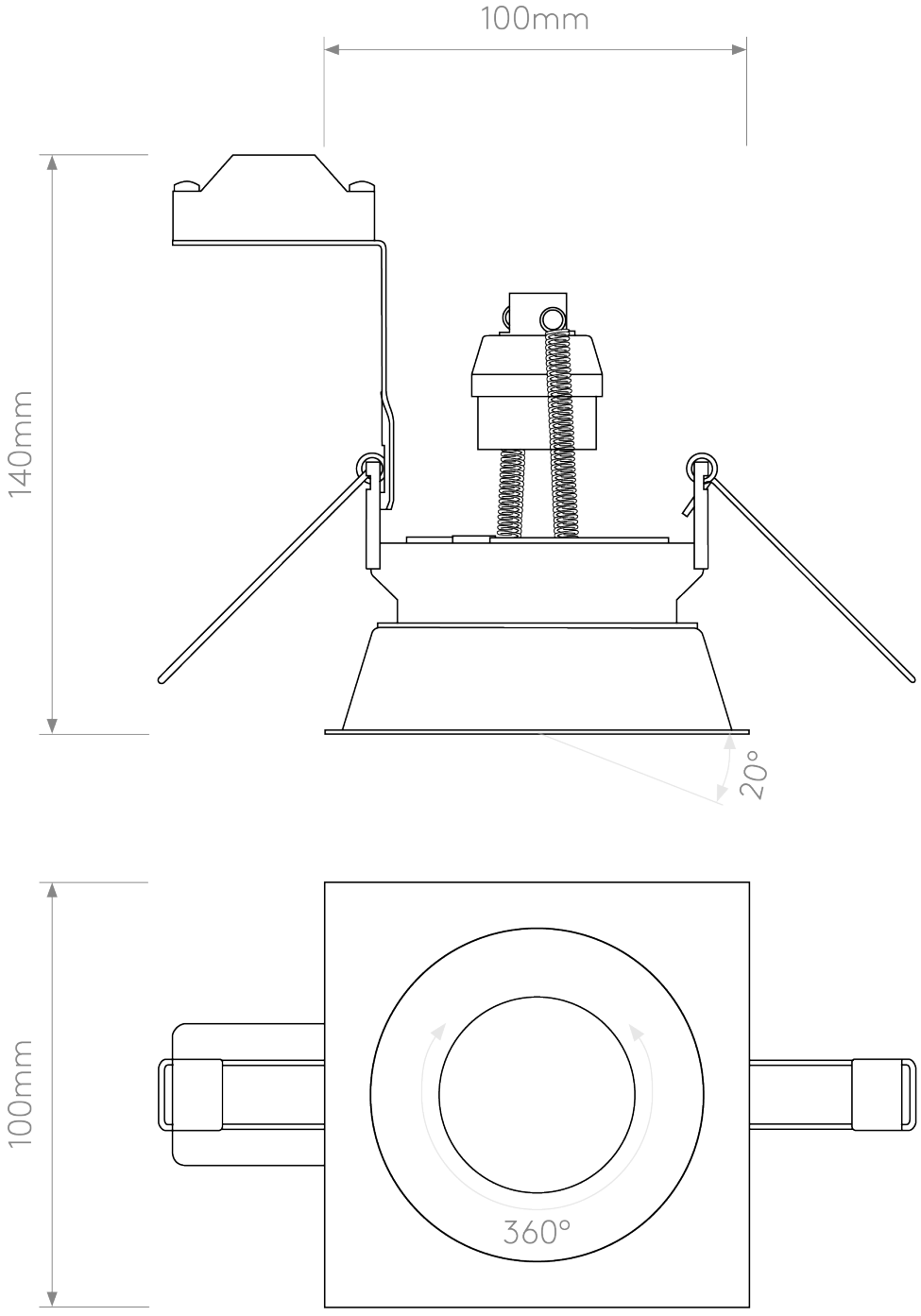

CONTACT