firstchoicelighting®

www.firstchoicelighting.co.uk
info@firstchoicelighting.co.uk

dimension diagram - 14/12/2020

4 x 28W Max G9 Eco Halogen (required)
Non-dimmable
FCL-81069

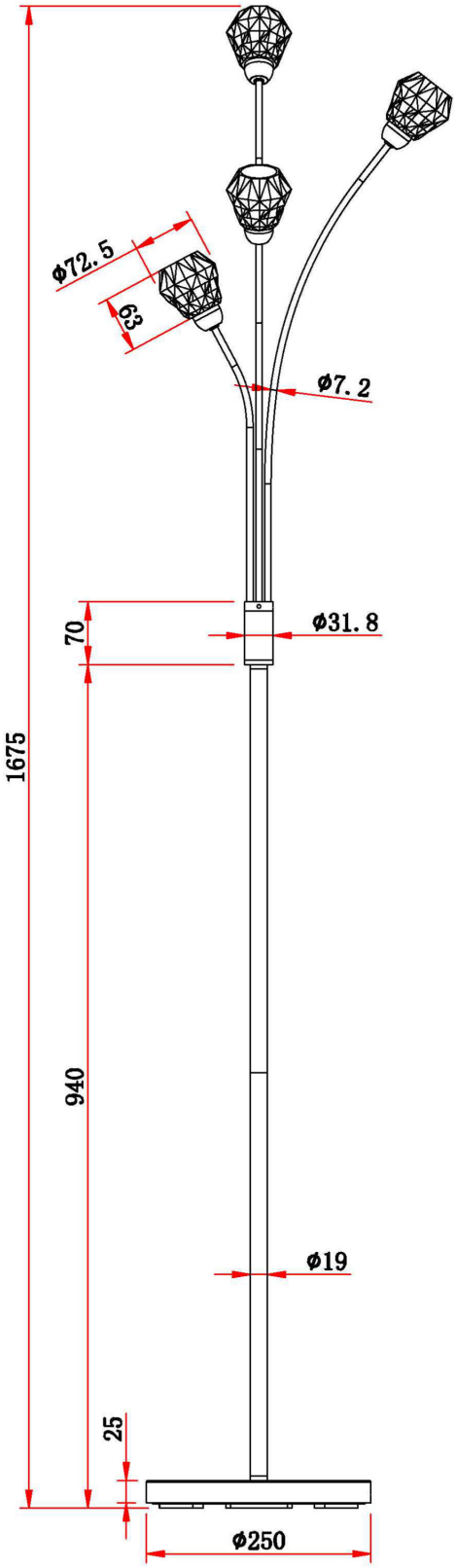

ip20 240V dim