firstchoice**lighting**®

www.firstchoicelighting.co.uk
info@firstchoicelighting.co.uk

assembly instruction - 14/12/2020

10W LED (included)
Dimmable
FCL-10906

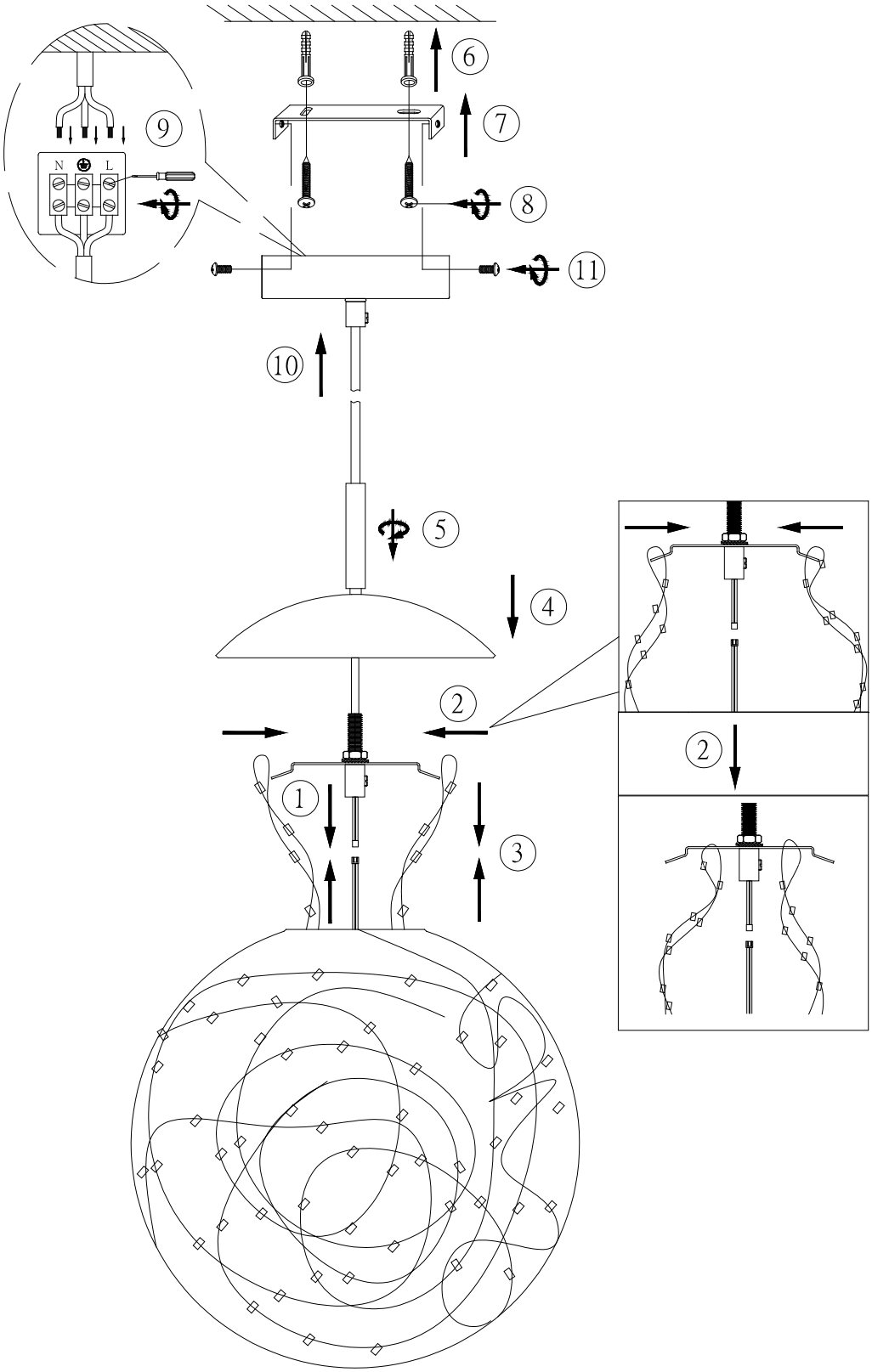

IP20 240V dim